Cylindrical roller bearing NUP306-EM1-A FAG

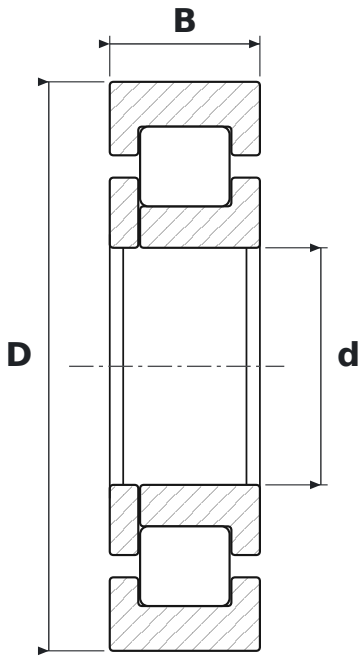

DIMENSIONS

d	bore diameter	**30 mm**
D	outside diameter	**72 mm**
B	width	**19 mm**

WHAT NUP306-EM1-A MEANS

E	reinforced design, higher load rating
M1	koszyk mosiężny masywny, dwuczęściowy, prowadzony na wałeczkach

SPECIFICATIONS

Manufacturer	**FAG**
Manufacturer designation	**NUP306-EM1-A**
Rolling elements	**single-row cylindrical roller bearing**
Mass	**0.42 kg**