Cylindrical roller bearing NUP308 KOYO

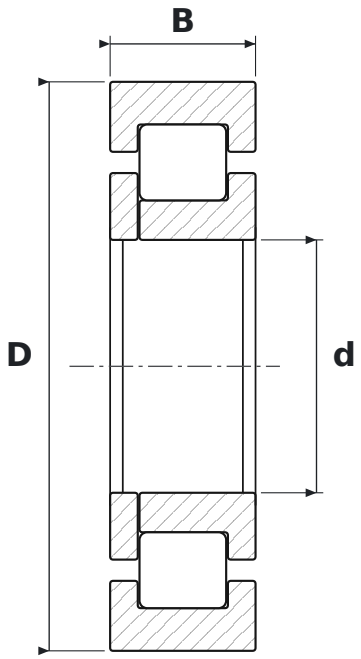

DIMENSIONS

d	bore diameter	**40 mm**
D	outside diameter	**90 mm**
B	width	**23 mm**

SPECIFICATIONS

Manufacturer	**KOYO**
Manufacturer designation	**NUP308**
Rolling elements	**single-row cylindrical roller bearing**
Seal	**open – no seals**
Radial internal clearance	**CN – normal**