Cylindrical roller bearing NUP309 ECJ/C3 SKF

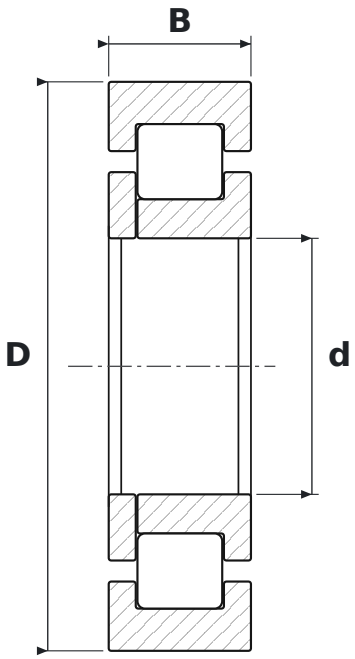

DIMENSIONS

d	bore diameter	**45 mm**
D	outside diameter	**100 mm**
B	width	**25 mm**

WHAT NUP309 ECJ/C3 MEANS

ECJ	EC design, pressed steel cage (SKF)
C3	radial clearance greater than normal

SPECIFICATIONS

Manufacturer	**SKF**
Manufacturer designation	**NUP309 ECJ/C3**
Rolling elements	**single-row cylindrical roller bearing**