Cylindrical roller bearing NUP311 EG NACHI

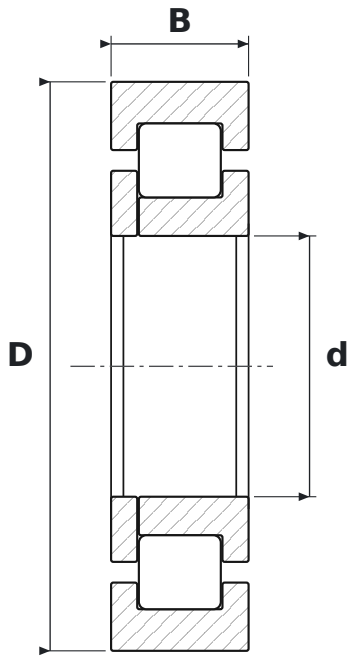

DIMENSIONS

d	bore diameter	**55 mm**
D	outside diameter	**120 mm**
B	width	**29 mm**

SPECIFICATIONS

Manufacturer	**NACHI**
Manufacturer designation	**NUP311 EG**
Rolling elements	**single-row cylindrical roller bearing**
E	**zmieniona konstrukcja wewnętrzna łożyska wałeczkowego**
Seal	**open – no seals**
Radial internal clearance	**CN – normal**