Cylindrical roller bearing NUP311 ET NSK

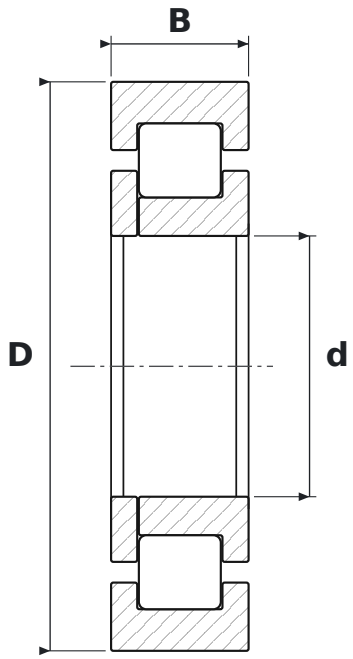

DIMENSIONS

d	bore diameter	**55 mm**
D	outside diameter	**120 mm**
B	width	**29 mm**

WHAT NUP311 ET MEANS

E	reinforced design, higher load rating
T	koszyk z poliamidu 66 wzmocnionego włóknem szklanym

SPECIFICATIONS

Manufacturer	**NSK**
Manufacturer designation	**NUP311 ET**
Rolling elements	**single-row cylindrical roller bearing**
Mass	**1.52 kg**