Cylindrical roller bearing NUP314 ECNML/C3 SKF

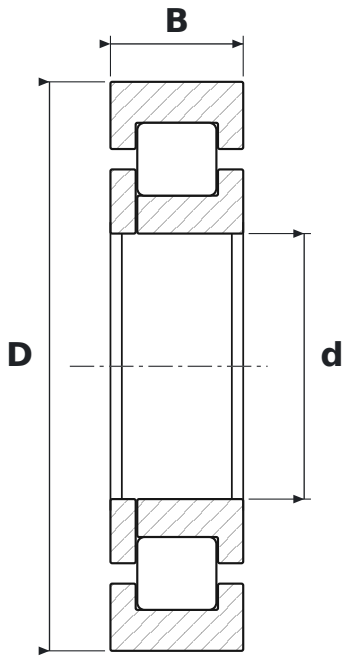

DIMENSIONS

d	bore diameter	**70 mm**
D	outside diameter	**150 mm**
B	width	**35 mm**

WHAT NUP314 ECNML/C3 MEANS

EC	reinforced EC design, more rollers (SKF)
N	snap ring groove
ML	koszyk mosiężny masywny okienkowy, prowadzony na pierścieniu wewnętrznym lub zewnętrznym
C3	radial clearance greater than normal

SPECIFICATIONS

Manufacturer	**SKF**
Manufacturer designation	**NUP314 ECNML/C3**
Rolling elements	**single-row cylindrical roller bearing**