Cylindrical roller bearing NUP320 ET NSK

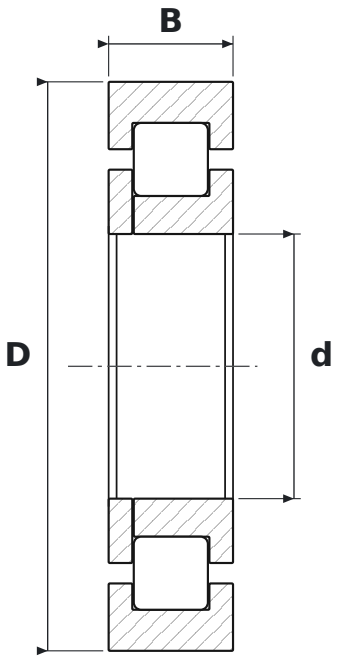

DIMENSIONS

d	bore diameter	**100 mm**
D	outside diameter	**215 mm**
B	width	**47 mm**

WHAT NUP320 ET MEANS

E	reinforced design, higher load rating
T	koszyk z poliamidu 66 wzmocnionego włóknem szklanym

SPECIFICATIONS

Manufacturer	**NSK**
Manufacturer designation	**NUP320 ET**
Rolling elements	**single-row cylindrical roller bearing**