# Cylindrical roller bearing SL045004 C3 INA

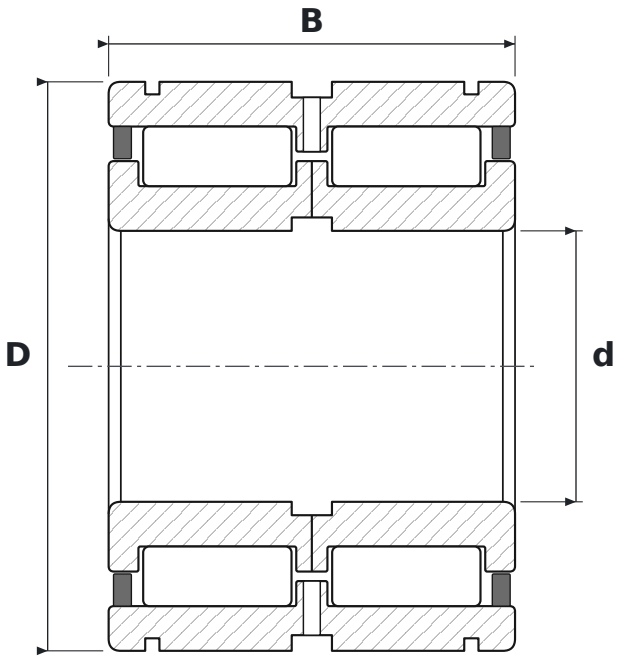


## DIMENSIONS

| | | |
|---|---|---|
| **d** | bore diameter | **20 mm** |
| **D** | outside diameter | **42 mm** |
| **B** | width | **30 mm** |

## SPECIFICATIONS

| | |
|---|---|
| Manufacturer | **INA** |
| Manufacturer designation | **SL045004 C3** |
| Rolling elements | **double-row cylindrical roller bearing, full complement** |
| C3 | **radial clearance greater than normal** |
| Seal | **open – no seals** |
| Mass | **0.2 kg** |