CASTOMER

DATASHEET

Cylindrical roller bearing SL045004 PP2NR INA

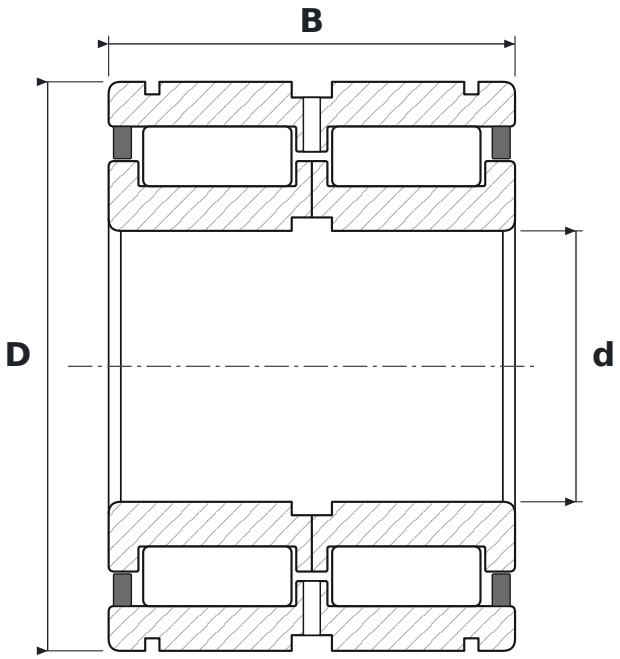

DIMENSIONS

d	bore diameter	**20 mm**
D	outside diameter	**42 mm**
B	width	**30 mm**

SPECIFICATIONS

Manufacturer	**INA**
Manufacturer designation	**SL045004 PP2NR**
Rolling elements	**double-row cylindrical roller bearing, full complement**
2RS	**contact rubber seals, both sides**
Radial internal clearance	**CN – normal**
Mass	**0.21 kg**