Cylindrical roller bearing SL182207 INA

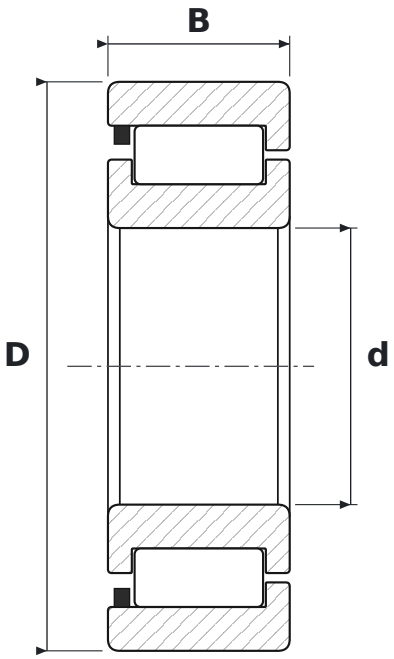

DIMENSIONS

d	bore diameter	**35 mm**
D	outside diameter	**72 mm**
B	width	**23 mm**

SPECIFICATIONS

Manufacturer	**INA**
Manufacturer designation	**SL182207**
Rolling elements	**single-row cylindrical roller bearing, full complement**
Seal	**open – no seals**
Radial internal clearance	**CN – normal**
Basic dynamic load rating C	**88 kN**
Basic static load rating C0	**78 kN**
Mass	**0.43 kg**