Cylindrical roller bearing SL182208 C3 INA

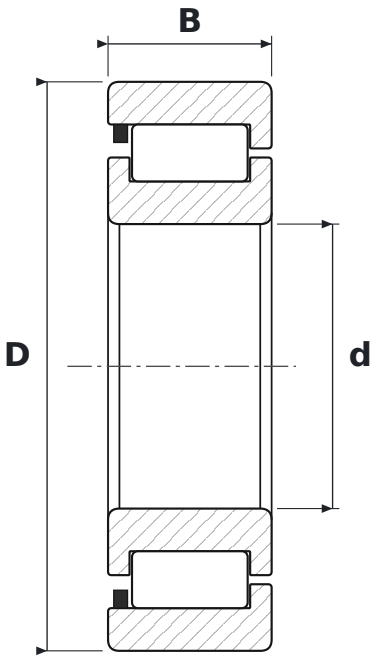

DIMENSIONS

d	bore diameter	**40 mm**
D	outside diameter	**80 mm**
B	width	**23 mm**

SPECIFICATIONS

Manufacturer	**INA**
Manufacturer designation	**SL182208 C3**
Rolling elements	**single-row cylindrical roller bearing, full complement**
C3	**radial clearance greater than normal**
Seal	**open – no seals**
Basic dynamic load rating C	**97 kN**
Basic static load rating C0	**91 kN**