Cylindrical roller bearing SL182210 INA

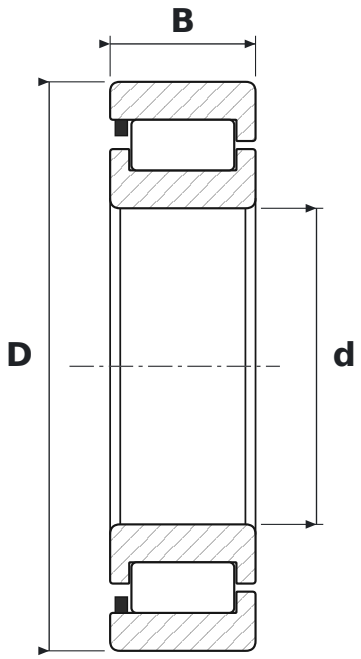

DIMENSIONS

d	bore diameter	**50 mm**
D	outside diameter	**90 mm**
B	width	**23 mm**

SPECIFICATIONS

Manufacturer	**INA**
Manufacturer designation	**SL182210**
Rolling elements	**single-row cylindrical roller bearing, full complement**
Seal	**open – no seals**
Radial internal clearance	**CN – normal**
Basic dynamic load rating C	**109 kN**
Basic static load rating C0	**111 kN**
Mass	**0.63 kg**