Cylindrical roller bearing SL182230-TB INA

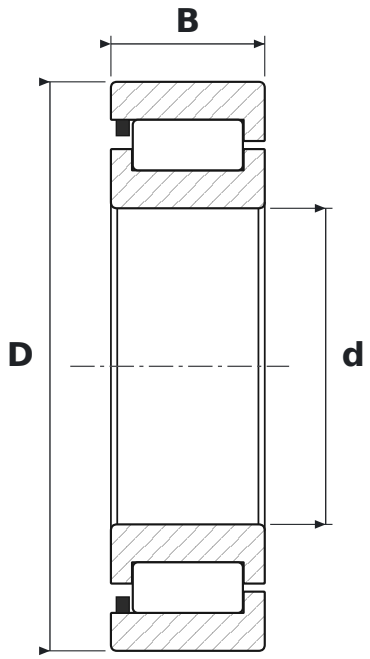

DIMENSIONS

d	bore diameter	**150 mm**
D	outside diameter	**270 mm**
B	width	**73 mm**

SPECIFICATIONS

Manufacturer	**INA**
Manufacturer designation	**SL182230-TB**
Rolling elements	**single-row cylindrical roller bearing, full complement**
B	**40° contact angle**
Seal	**open – no seals**
Radial internal clearance	**CN – normal**