Cylindrical roller bearing SL182232 C3 INA

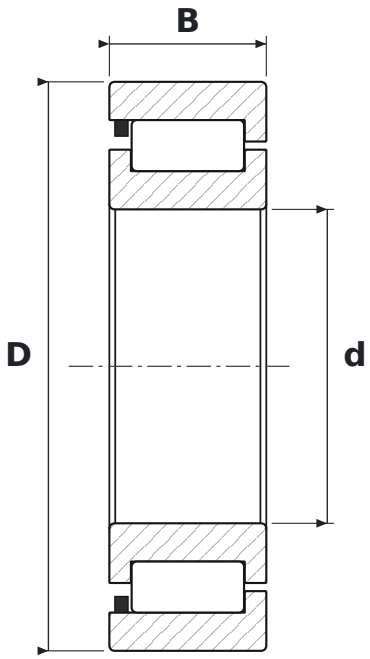

DIMENSIONS

d	bore diameter	**160 mm**
D	outside diameter	**290 mm**
B	width	**80 mm**

SPECIFICATIONS

Manufacturer	**INA**
Manufacturer designation	**SL182232 C3**
Rolling elements	**single-row cylindrical roller bearing, full complement**
C3	**radial clearance greater than normal**
Seal	**open – no seals**
Basic dynamic load rating C	**1,020 kN**
Basic static load rating C0	**1,470 kN**
Mass	**22.504 kg**