# Cylindrical roller bearing SL183007 C3 INA

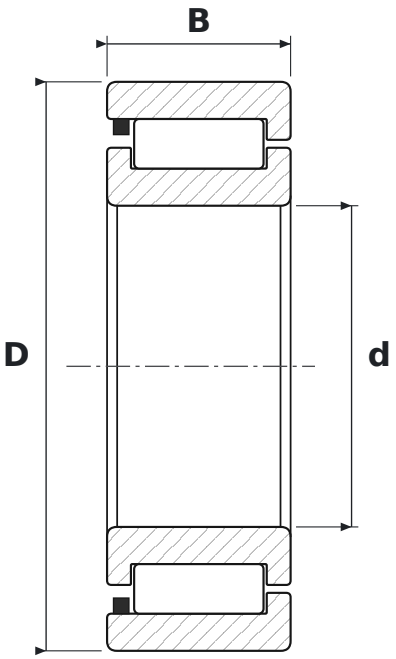


## DIMENSIONS

| | | |
|---|---|---|
| **d** | bore diameter | **35 mm** |
| **D** | outside diameter | **62 mm** |
| **B** | width | **20 mm** |

## SPECIFICATIONS

| | |
|---|---|
| Manufacturer | **INA** |
| Manufacturer designation | **SL183007 C3** |
| Rolling elements | **single-row cylindrical roller bearing, full complement** |
| C3 | **radial clearance greater than normal** |
| Seal | **open – no seals** |
| Basic dynamic load rating C | **55 kN** |
| Basic static load rating C0 | **53 kN** |