CASTOMER

DATASHEET

Cylindrical roller bearing SL183030 C3 INA

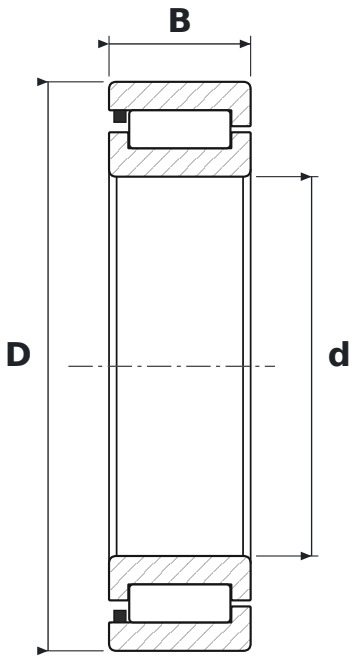

DIMENSIONS

d	bore diameter	**150 mm**
D	outside diameter	**225 mm**
B	width	**56 mm**

SPECIFICATIONS

Manufacturer	**INA**
Manufacturer designation	**SL183030 C3**
Rolling elements	**single-row cylindrical roller bearing, full complement**
C3	**radial clearance greater than normal**
Seal	**open – no seals**
Basic dynamic load rating C	**475 kN**
Basic static load rating C0	**700 kN**
Mass	**7.33 kg**