Cylindrical roller bearing SL185004-C3 INA

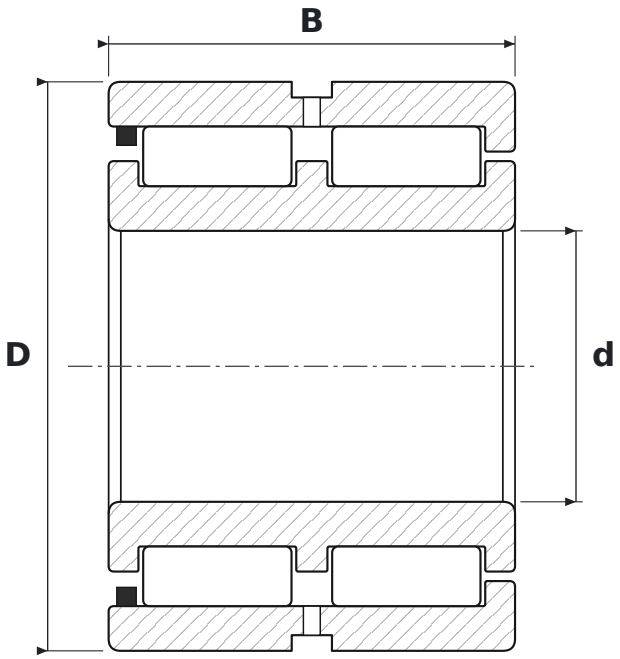

DIMENSIONS

d	bore diameter	**20 mm**
D	outside diameter	**42 mm**
B	width	**30 mm**

SPECIFICATIONS

Manufacturer	**INA**
Manufacturer designation	**SL185004-C3**
Rolling elements	**double-row cylindrical roller bearing, full complement**
C3	**radial clearance greater than normal**
Seal	**open – no seals**
Basic dynamic load rating C	**53 kN**
Basic static load rating C0	**52 kN**