CASTOMER

DATASHEET

# Spindle bearing 70UHS30 .A15.0/I.L UKF

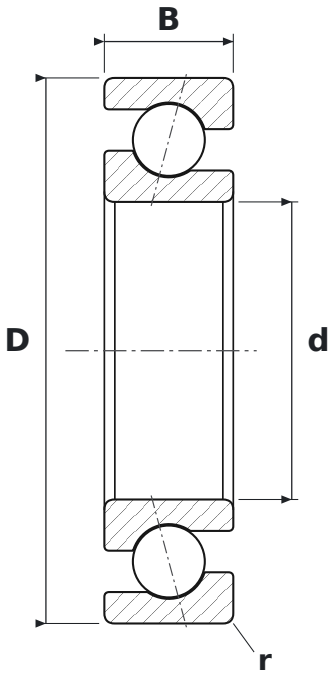


## DIMENSIONS

| | | |
|---|---|---|
| **d** | bore diameter | **30 mm** |
| **D** | outside diameter | **55 mm** |
| **B** | width | **13 mm** |
| **r** | chamfer dimension (min.) | **1.3 mm** |

## SPECIFICATIONS

| | |
|---|---|
| Manufacturer | **UKF** |
| Manufacturer designation | **70UHS30 .A15.0/I.L** |
| r min – chamfer dimension | **1.3 mm** |
| Rolling elements | **single-row ball bearing** |
| Contact angle | **15°** |
| Features | **Light preload (L)** |
| Basic dynamic load rating C | **8.45 kN** |
| Basic static load rating C0 | **7.78 kN** |
| Limiting speed | **38,780 r/min** |
| Mass | **0.12 kg** |