CASTOMER

DATASHEET

Spindle bearing 7903 UADGGLP42U3G NTN

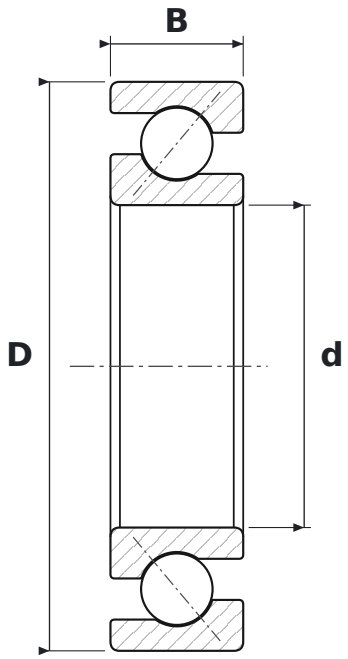

DIMENSIONS

d	bore diameter	**17 mm**
D	outside diameter	**30 mm**
B	width	**7 mm**

SPECIFICATIONS

Manufacturer	**NTN**
Manufacturer designation	**7903 UADGGLP42U3G**
Rolling elements	**single-row ball bearing**
UA	**manufacturer design code**
GL	**manufacturer design code**
P4	**tolerance class P4 (precision)**
Seal	**open – no seals**