Spindle bearing 7905 UADGGMP42 NTN

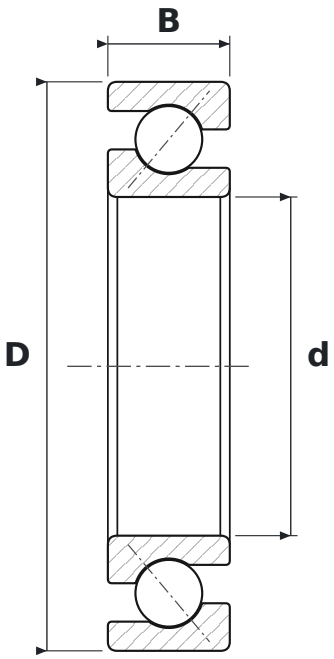

DIMENSIONS

d	bore diameter	**25 mm**
D	outside diameter	**42 mm**
B	width	**9 mm**

SPECIFICATIONS

Manufacturer	**NTN**
Manufacturer designation	**7905 UADGGMP42**
Rolling elements	**single-row ball bearing**
UA	**manufacturer design code**
GM	**manufacturer design code**
P4	**tolerance class P4 (precision)**
Seal	**open – no seals**