Drive belt 20X1500 OPTIBELT

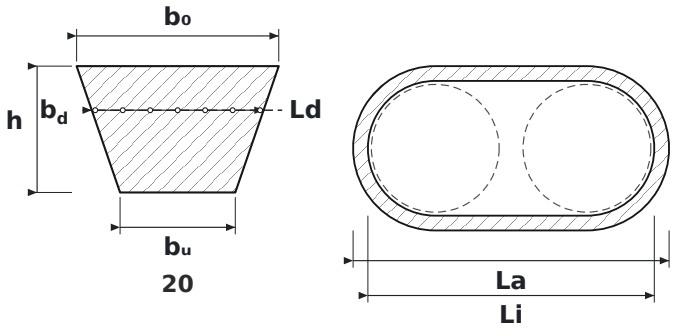

DIMENSIONS

b0	belt top width	**20 mm**
h	belt height	**12.5 mm**
bu	belt bottom width	**11.4 mm**
bd	datum width (at the pitch line)	**17 mm**
Ld	datum length – measured along the pitch line	**1,548 mm**
La	outside length of the belt	**1,579 mm**
Li	inside length of the belt	**1,500 mm**

SPECIFICATIONS

Manufacturer	**OPTIBELT**
Manufacturer designation	**20X1500**
Type	**Classical V-belt**
Belt section	**20**
Ld – datum length (effective Lw/Lp)	**1,548 mm**
Li – inside length	**1,500 mm**
La – outside length	**1,579 mm**
b_0 – top width	**20 mm**
h – belt height	**12.5 mm**
b_u – bottom width	**11.4 mm**
b^d – datum width	**17 mm**
Standard	**DIN 2215 / ISO 4184**
Recommended min. pulley diameter	**160 mm**
Mass per metre	**0.266 kg/m**
Dimensions source	**Katalog pasów klinowych Optibelt**