Drive belt 6X425 OPTIBELT

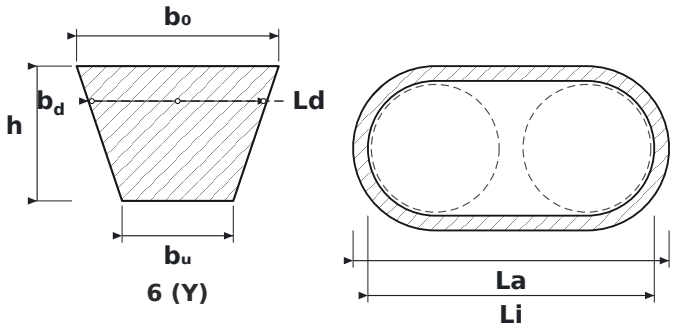

DIMENSIONS

b0	belt top width	**6 mm**
h	belt height	**4 mm**
bu	belt bottom width	**3.3 mm**
bd	datum width (at the pitch line)	**5.3 mm**
Ld	datum length – measured along the pitch line	**440 mm**
La	outside length of the belt	**450 mm**
Li	inside length of the belt	**425 mm**

SPECIFICATIONS

Manufacturer	**OPTIBELT**
Manufacturer designation	**6X425**
Type	**Classical V-belt**
Belt section	**6 (Y)**
Ld – datum length (effective Lw/Lp)	**440 mm**
Li – inside length	**425 mm**
La – outside length	**450 mm**
b_0 – top width	**6 mm**
h – belt height	**4 mm**
b_u – bottom width	**3.3 mm**
b^d – datum width	**5.3 mm**
Standard	**DIN 2215 / ISO 4184**
Recommended min. pulley diameter	**28 mm**
Mass per metre	**0.026 kg/m**
Dimensions source	**Katalog pasów klinowych Optibelt**