Drive belt 3V475 SWR

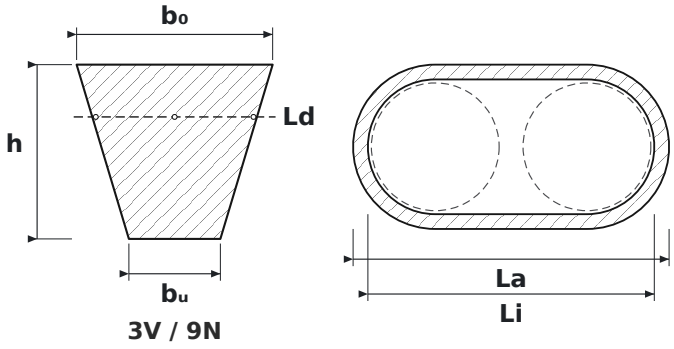

3V / 9N

DIMENSIONS

b0	belt top width	**9 mm**
h	belt height	**8 mm**
bu	belt bottom width	**4.2 mm**
Ld	datum length – measured along the pitch line	**1,203 mm**
La	outside length of the belt	**1,207 mm**
Li	inside length of the belt	**1,165 mm**

SPECIFICATIONS

Manufacturer	**SWR**
Manufacturer designation	**3V475**
Type	**Narrow V-belt (RMA/MPTA)**
Belt section	**3V / 9N**
Ld – datum length (effective Lw/Lp)	**1,203 mm**
Li – inside length	**1,165 mm**
La – outside length	**1,207 mm**
Belt number (inches)	**47.5″**
b₀ – top width	**9 mm**
h – belt height	**8 mm**
bᵤ – bottom width	**4.2 mm**
Standard	**RMA / MPTA**
Recommended min. pulley diameter	**63 mm**
Mass per metre	**0.074 kg/m**
Dimensions source	**Katalog pasów klinowych Optibelt**