Drive belt 5V1700 SWR

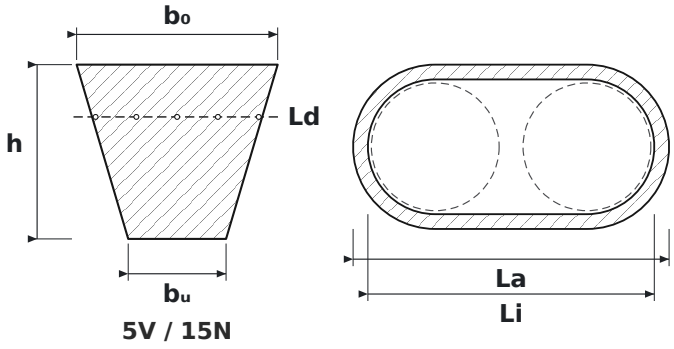

5V / 15N

DIMENSIONS

b0	belt top width	**15 mm**
h	belt height	**13 mm**
bu	belt bottom width	**7.3 mm**
Ld	datum length – measured along the pitch line	**4,307 mm**
La	outside length of the belt	**4,318 mm**
Li	inside length of the belt	**4,247 mm**

SPECIFICATIONS

Manufacturer	**SWR**
Manufacturer designation	**5V1700**
Type	**Narrow V-belt (RMA/MPTA)**
Belt section	**5V / 15N**
Ld – datum length (effective Lw/Lp)	**4,307 mm**
Li – inside length	**4,247 mm**
La – outside length	**4,318 mm**
Belt number (inches)	**170″**
b₀ – top width	**15 mm**
h – belt height	**13 mm**
bᵤ – bottom width	**7.3 mm**
Standard	**RMA / MPTA**
Recommended min. pulley diameter	**140 mm**
Mass per metre	**0.195 kg/m**
Dimensions source	**Katalog pasów klinowych Optibelt**