# Drive belt 5V1900 SWR

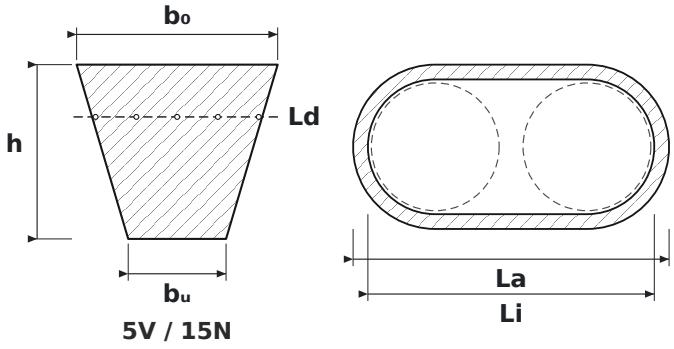


5V / 15N

## DIMENSIONS

| | | |
|---|---|---|
| **b0** | belt top width | **15 mm** |
| **h** | belt height | **13 mm** |
| **bu** | belt bottom width | **7.3 mm** |
| **Ld** | datum length – measured along the pitch line | **4,815 mm** |
| **La** | outside length of the belt | **4,826 mm** |
| **Li** | inside length of the belt | **4,755 mm** |

## SPECIFICATIONS

| | |
|---|---|
| Manufacturer | **SWR** |
| Manufacturer designation | **5V1900** |
| Type | **Narrow V-belt (RMA/MPTA)** |
| Belt section | **5V / 15N** |
| Ld – datum length (effective Lw/Lp) | **4,815 mm** |
| Li – inside length | **4,755 mm** |
| La – outside length | **4,826 mm** |
| Belt number (inches) | **190″** |
| b₀ – top width | **15 mm** |
| h – belt height | **13 mm** |
| bᵤ – bottom width | **7.3 mm** |
| Standard | **RMA / MPTA** |
| Recommended min. pulley diameter | **140 mm** |
| Mass per metre | **0.195 kg/m** |
| Dimensions source | **Katalog pasów klinowych Optibelt** |