Drive belt 8V1800 SWR

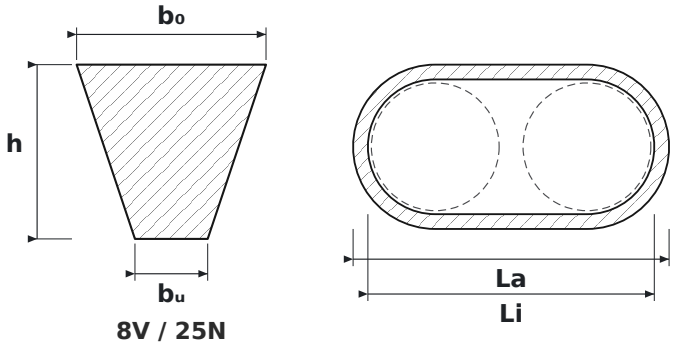

DIMENSIONS

b0	belt top width	**25 mm**
h	belt height	**23 mm**
bu	belt bottom width	**9.6 mm**
La	outside length of the belt	**4,572 mm**
Li	inside length of the belt	**4,452 mm**

SPECIFICATIONS

Manufacturer	**SWR**
Manufacturer designation	**8V1800**
Type	**Narrow V-belt (RMA/MPTA)**
Belt section	**8V / 25N**
Li – inside length	**4,452 mm**
La – outside length	**4,572 mm**
Belt number (inches)	**180″**
b₀ – top width	**25 mm**
h – belt height	**23 mm**
bᵤ – bottom width	**9.6 mm**
Standard	**RMA / MPTA**
Recommended min. pulley diameter	**315 mm**
Mass per metre	**0.575 kg/m**
Dimensions source	**Katalog pasów klinowych Optibelt**