Drive belt 8V3550 RP OPTIBELT

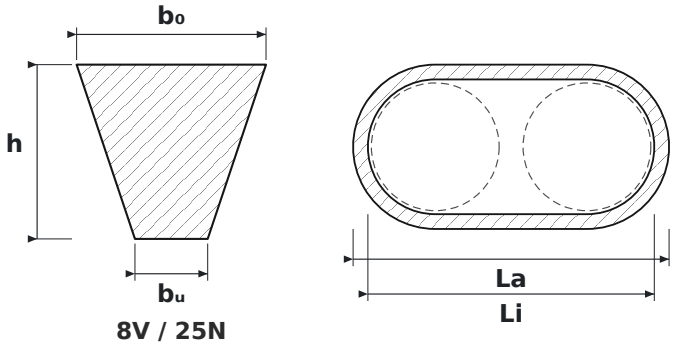

DIMENSIONS

b0	belt top width	**25 mm**
h	belt height	**23 mm**
bu	belt bottom width	**9.6 mm**
La	outside length of the belt	**9,017 mm**
Li	inside length of the belt	**8,897 mm**

SPECIFICATIONS

Manufacturer	**OPTIBELT**
Manufacturer designation	**8V3550 RP**
Type	**Narrow V-belt (RMA/MPTA)**
Belt section	**8V / 25N**
Li – inside length	**8,897 mm**
La – outside length	**9,017 mm**
Belt number (inches)	**355″**
b_0 – top width	**25 mm**
h – belt height	**23 mm**
b_u – bottom width	**9.6 mm**
Standard	**RMA / MPTA**
Recommended min. pulley diameter	**315 mm**
Mass per metre	**0.575 kg/m**
Version	**RED POWER II**
Dimensions source	**Katalog pasów klinowych Optibelt**