CASTOMER

DATASHEET

Drive belt A123 SWR

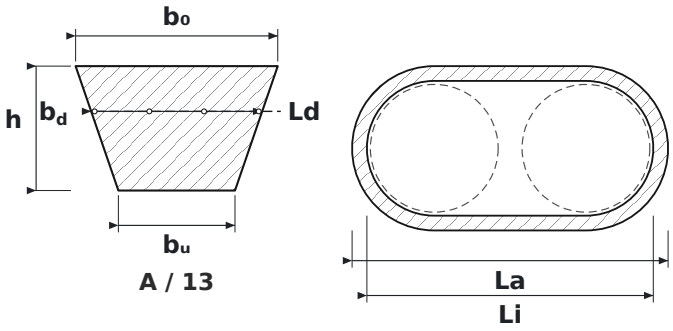

DIMENSIONS

b0	belt top width	**13 mm**
h	belt height	**8 mm**
bu	belt bottom width	**7.5 mm**
bd	datum width (at the pitch line)	**11 mm**
Ld	datum length – measured along the pitch line	**3,154 mm**
La	outside length of the belt	**3,174 mm**
Li	inside length of the belt	**3,124 mm**

SPECIFICATIONS

Manufacturer	**SWR**
Manufacturer designation	**A123**
Type	**Classical V-belt**
Belt section	**A / 13**
Ld – datum length (effective Lw/Lp)	**≈ 3,154 mm**
Li – inside length	**≈ 3,124 mm**
La – outside length	**≈ 3,174 mm**
Belt number (inches)	**123″**
b_0 – top width	**13 mm**
h – belt height	**8 mm**
b_u – bottom width	**7.5 mm**
b^d – datum width	**11 mm**
Standard	**DIN 2215 / ISO 4184**
Recommended min. pulley diameter	**71 mm**
Mass per metre	**0.109 kg/m**
Dimensions source	**Katalog pasów klinowych Optibelt**