Drive belt SPA1332 RP OPTIBELT

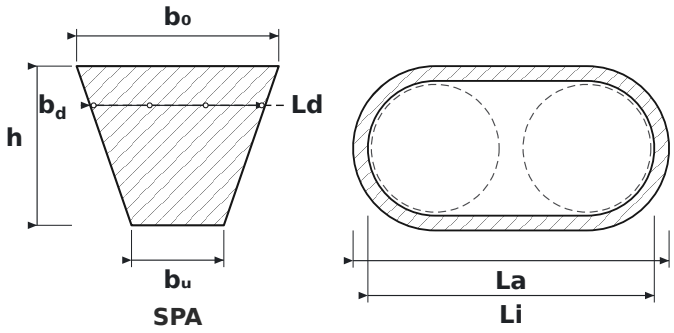

DIMENSIONS

b0	belt top width	**12.7 mm**
h	belt height	**10 mm**
bu	belt bottom width	**5.8 mm**
bd	datum width (at the pitch line)	**11 mm**
Ld	datum length – measured along the pitch line	**1,332 mm**
La	outside length of the belt	**1,350 mm**
Li	inside length of the belt	**1,287 mm**

SPECIFICATIONS

Manufacturer	**OPTIBELT**
Manufacturer designation	**SPA1332 RP**
Type	**Narrow V-belt**
Belt section	**SPA**
Ld – datum length (effective Lw/Lp)	**1,332 mm**
Li – inside length	**1,287 mm**
La – outside length	**1,350 mm**
b_0 – top width	**12.7 mm**
h – belt height	**10 mm**
b_u – bottom width	**5.8 mm**
b^d – datum width	**11 mm**
Standard	**DIN 7753 cz. 1 / ISO 4184**
Recommended min. pulley diameter	**90 mm**
Mass per metre	**0.123 kg/m**
Version	**RED POWER II**
Dimensions source	**Katalog pasów klinowych Optibelt**