# Drive belt SPA1532 RP OPTIBELT

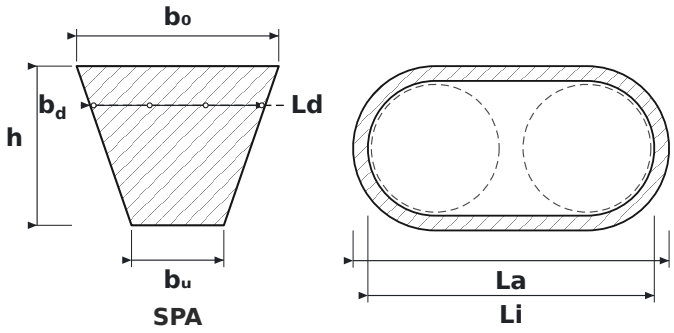


## DIMENSIONS

| | | |
|---|---|---|
| **b0** | belt top width | **12.7 mm** |
| **h** | belt height | **10 mm** |
| **bu** | belt bottom width | **5.8 mm** |
| **bd** | datum width (at the pitch line) | **11 mm** |
| **Ld** | datum length – measured along the pitch line | **1,532 mm** |
| **La** | outside length of the belt | **1,550 mm** |
| **Li** | inside length of the belt | **1,487 mm** |

## SPECIFICATIONS

| | |
|---|---|
| Manufacturer | **OPTIBELT** |
| Manufacturer designation | **SPA1532 RP** |
| Type | **Narrow V-belt** |
| Belt section | **SPA** |
| Ld – datum length (effective Lw/Lp) | **1,532 mm** |
| Li – inside length | **1,487 mm** |
| La – outside length | **1,550 mm** |
| $b_0$ – top width | **12.7 mm** |
| h – belt height | **10 mm** |
| $b_u$ – bottom width | **5.8 mm** |
| $b^d$ – datum width | **11 mm** |
| Standard | **DIN 7753 cz. 1 / ISO 4184** |
| Recommended min. pulley diameter | **90 mm** |
| Mass per metre | **0.123 kg/m** |
| Version | **RED POWER II** |
| Dimensions source | **Katalog pasów klinowych Optibelt** |