Linear carriage R166211420 BOSCH REXROTH

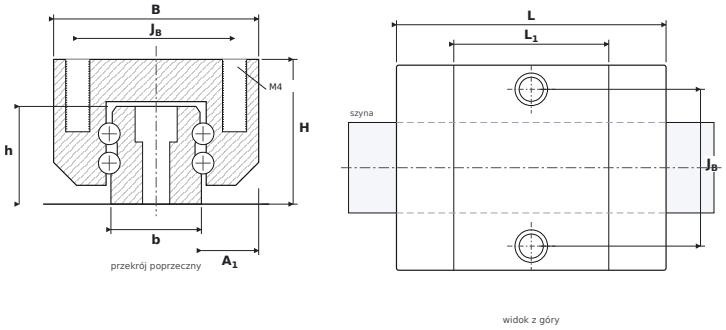

DIMENSIONS

B	carriage width	**34 mm**
H	overall height (carriage on rail)	**24 mm**
L	overall carriage length	**44.7 mm**
L1	body length (without end seals)	**25.7 mm**
JB	mounting hole spacing — across	**26 mm**
A1	rail flank to carriage side	**9.5 mm**
b	rail width	**15 mm**
h	rail height	**16.2 mm**

SPECIFICATIONS

Manufacturer	**BOSCH REXROTH**
Manufacturer designation	**R166211420**
Rolling elements	**four-row ball carriage**
Basic dynamic load rating C	**3.9 kN**
Mass	**0.1 kg**
carriage mounting thread ($G_2 \times T_5$)	**M4**
matching rail	**SNS15**
static moments M_{0x} / M_{0Y} / M_{0Z}	**39 Nm**