Linear carriage R166281420 BOSCH REXROTH

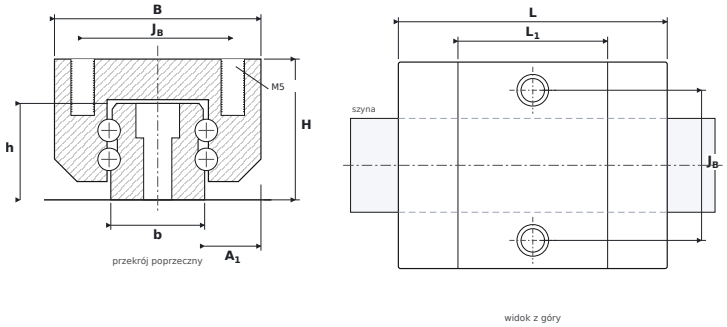

DIMENSIONS

B	carriage width	**44 mm**
H	overall height (carriage on rail)	**30 mm**
L	overall carriage length	**57.3 mm**
L1	body length (without end seals)	**31.9 mm**
JB	mounting hole spacing — across	**32 mm**
A1	rail flank to carriage side	**12 mm**
b	rail width	**20 mm**
h	rail height	**20.55 mm**

SPECIFICATIONS

Manufacturer	**BOSCH REXROTH**
Manufacturer designation	**R166281420**
Rolling elements	**four-row ball carriage**
Basic dynamic load rating C	**10.1 kN**
Mass	**0.25 kg**
carriage mounting thread ($G_2 \times T_5$)	**M5**
matching rail	**SNS20**
static moments M_{0x} / M_{0Y} / M_{0Z}	**130 Nm**