CASTOMER

DATASHEET

Linear carriage R166489410 BOSCH REXROTH

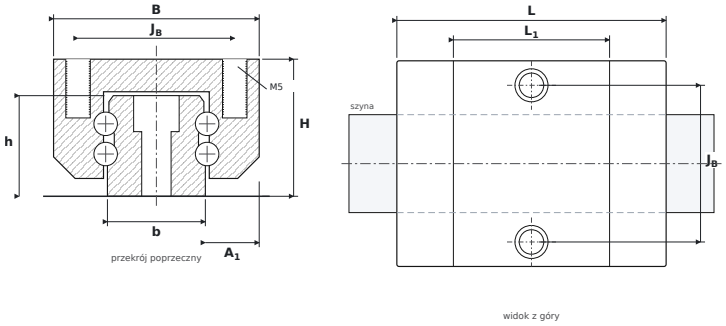

DIMENSIONS

B	carriage width	**42 mm**
H	overall height (carriage on rail)	**28 mm**
L	overall carriage length	**55 mm**
L1	body length (without end seals)	**31.9 mm**
JB	mounting hole spacing — across	**32 mm**
A1	rail flank to carriage side	**11 mm**
b	rail width	**20 mm**
h	rail height	**20.55 mm**

SPECIFICATIONS

Manufacturer	**BOSCH REXROTH**
Manufacturer designation	**R166489410**
Rolling elements	**four-row ball carriage**
Basic dynamic load rating C	**9.6 kN**
Basic static load rating C0	**13.6 kN**
Mass	**0.2 kg**
carriage mounting thread ($G_2 \times T_5$)	**M5**
matching rail	**SNS20**
static moments M_{0x} / M_{0Y} / M_{0Z}	**120 / 40 Nm**