Linear carriage R166531320 BOSCH REXROTH

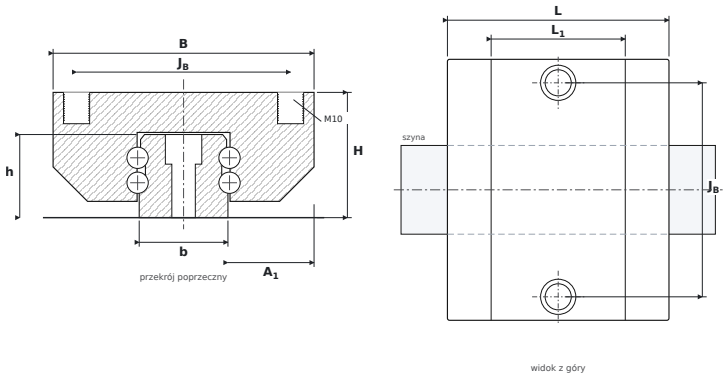

DIMENSIONS

B	carriage width	**100 mm**
H	overall height (carriage on rail)	**48 mm**
L	overall carriage length	**84.9 mm**
L1	body length (without end seals)	**51.4 mm**
JB	mounting hole spacing — across	**82 mm**
A1	rail flank to carriage side	**33 mm**
b	rail width	**34 mm**
h	rail height	**31.85 mm**

SPECIFICATIONS

Manufacturer	**BOSCH REXROTH**
Manufacturer designation	**R166531320**
Rolling elements	**four-row ball carriage**
Basic dynamic load rating C	**36.6 kN**
Basic static load rating C0	**49.3 kN**
Mass	**1.2 kg**
carriage mounting thread ($G_2 \times T_5$)	**M10**
matching rail	**SNS35**
static moments M_{0x} / M_{0Y} / M_{0Z}	**790 / 340 Nm**