Linear carriage R166629420 BOSCH REXROTH

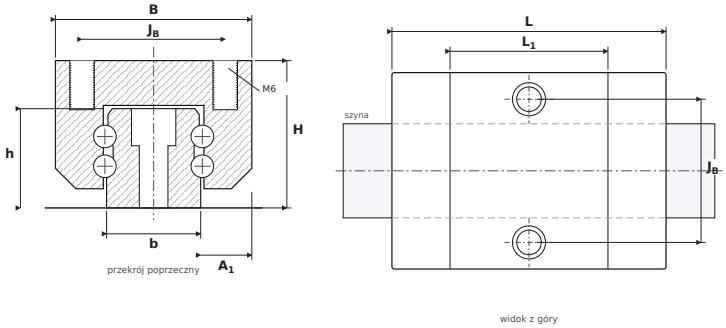

DIMENSIONS

B	carriage width	**48 mm**
H	overall height (carriage on rail)	**36 mm**
L	overall carriage length	**67 mm**
L1	body length (without end seals)	**38.6 mm**
JB	mounting hole spacing — across	**35 mm**
A1	rail flank to carriage side	**12.5 mm**
b	rail width	**23 mm**
h	rail height	**24.25 mm**

SPECIFICATIONS

Manufacturer	**BOSCH REXROTH**
Manufacturer designation	**R166629420**
Rolling elements	**four-row ball carriage**
Basic dynamic load rating C	**19.8 kN**
Basic static load rating C0	**21.2 kN**
Mass	**0.35 kg**
carriage mounting thread ($G_2 \times T_5$)	**M6**
matching rail	**SNS25**
static moments M_{0x} / M_{0Y} / M_{0Z}	**280 / 130 Nm**