CASTOMER

DATASHEET

Linear carriage R166671420 BOSCH REXROTH

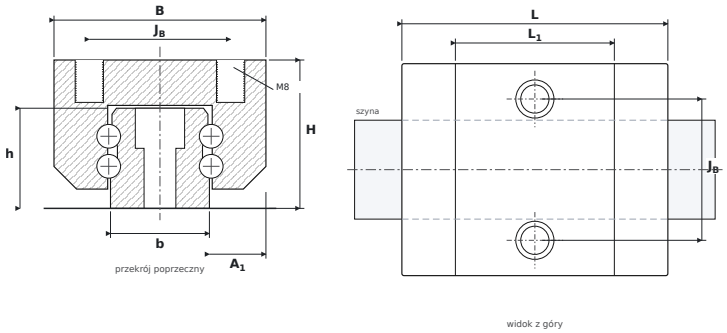

DIMENSIONS

B	carriage width	**60 mm**
H	overall height (carriage on rail)	**42 mm**
L	overall carriage length	**75.3 mm**
L1	body length (without end seals)	**45 mm**
JB	mounting hole spacing — across	**40 mm**
A1	rail flank to carriage side	**16 mm**
b	rail width	**28 mm**
h	rail height	**28.35 mm**

SPECIFICATIONS

Manufacturer	**BOSCH REXROTH**
Manufacturer designation	**R166671420**
Rolling elements	**four-row ball carriage**
Basic dynamic load rating C	**25.6 kN**
Basic static load rating C0	**28.9 kN**
Mass	**0.6 kg**
carriage mounting thread ($G_2 \times T_5$)	**M8**
matching rail	**SNS30**
static moments M_{0x} / M_{0Y} / M_{0Z}	**440 / 200 Nm**