CASTOMER

DATASHEET

Linear carriage R18534232X BOSCH REXROTH

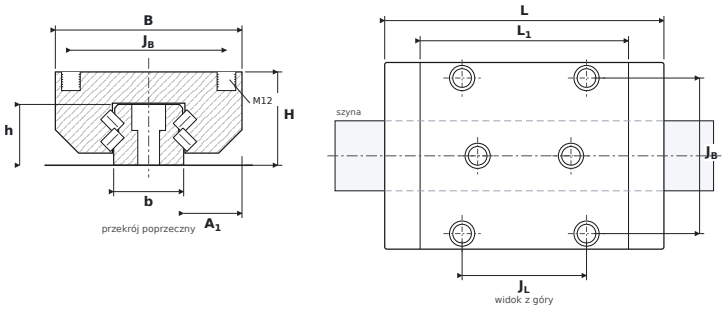

DIMENSIONS

B	carriage width	**120 mm**
H	overall height (carriage on rail)	**60 mm**
L	overall carriage length	**179.5 mm**
L1	body length (without end seals)	**134 mm**
JB	mounting hole spacing — across	**100 mm**
JL	corner hole spacing — along	**80 mm**
A1	rail flank to carriage side	**37.5 mm**
b	rail width	**45 mm**
h	rail height	**39.1 mm**

SPECIFICATIONS

Manufacturer	**BOSCH REXROTH**
Manufacturer designation	**R18534232X**
Rolling elements	**cylindrical roller carriage**
Basic dynamic load rating C	**132.3 kN**
Basic static load rating C0	**276.4 kN**
Mass	**5.15 kg**
carriage mounting thread ($G_2 \times T_5$)	**M12**
matching rail	**SNS 45 (R1805)**
static moments M_{0x} / M_{0Y} / M_{0Z}	**3,270 / 2,690 Nm**