# Linear carriage R18534322X BOSCH REXROTH

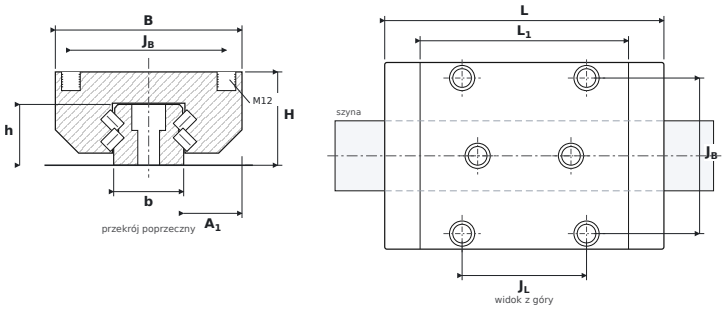


## DIMENSIONS

| | | |
|---|---|---|
| **B** | carriage width | **120 mm** |
| **H** | overall height (carriage on rail) | **60 mm** |
| **L** | overall carriage length | **179.5 mm** |
| **L1** | body length (without end seals) | **134 mm** |
| **JB** | mounting hole spacing — across | **100 mm** |
| **JL** | corner hole spacing — along | **80 mm** |
| **A1** | rail flank to carriage side | **37.5 mm** |
| **b** | rail width | **45 mm** |
| **h** | rail height | **39.1 mm** |

## SPECIFICATIONS

| | |
|---|---|
| Manufacturer | **BOSCH REXROTH** |
| Manufacturer designation | **R18534322X** |
| Rolling elements | **cylindrical roller carriage** |
| Basic dynamic load rating C | **132.3 kN** |
| Basic static load rating C0 | **276.4 kN** |
| Mass | **5.15 kg** |
| carriage mounting thread ($G_2 \times T_5$) | **M12** |
| matching rail | **SNS 45 (R1805)** |
| static moments $M_{0x}$ / $M_{0Y}$ / $M_{0Z}$ | **3,270 / 2,690 Nm** |