CASTOMER

**DATASHEET**

# Linear carriage R18535232X BOSCH REXROTH

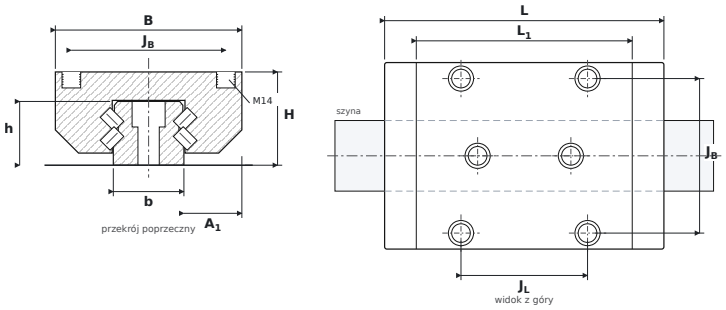


## DIMENSIONS

| | | |
|---|---|---|
| **B** | carriage width | **140 mm** |
| **H** | overall height (carriage on rail) | **70 mm** |
| **L** | overall carriage length | **209.65 mm** |
| **L1** | body length (without end seals) | **162.1 mm** |
| **JB** | mounting hole spacing — across | **116 mm** |
| **JL** | corner hole spacing — along | **95 mm** |
| **A1** | rail flank to carriage side | **43.5 mm** |
| **b** | rail width | **53 mm** |
| **h** | rail height | **47.85 mm** |

## SPECIFICATIONS

| | |
|---|---|
| Manufacturer | **BOSCH REXROTH** |
| Manufacturer designation | **R18535232X** |
| Rolling elements | **cylindrical roller carriage** |
| Basic dynamic load rating C | **174 kN** |
| Basic static load rating C0 | **374.9 kN** |
| Mass | **7.15 kg** |
| carriage mounting thread ($G_2 \times T_5$) | **M14** |
| matching rail | **SNS 55 (R1805)** |
| static moments $M_{0x}$ / $M_{0Y}$ / $M_{0Z}$ | **5,100 / 4,420 Nm** |