Linear carriage R18535312X BOSCH REXROTH

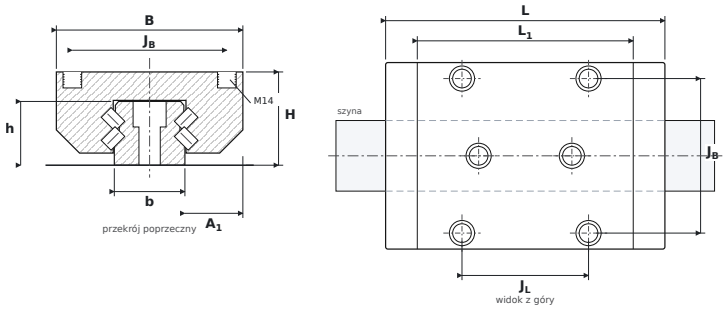

DIMENSIONS

B	carriage width	**140 mm**
H	overall height (carriage on rail)	**70 mm**
L	overall carriage length	**209.65 mm**
L1	body length (without end seals)	**162.1 mm**
JB	mounting hole spacing — across	**116 mm**
JL	corner hole spacing — along	**95 mm**
A1	rail flank to carriage side	**43.5 mm**
b	rail width	**53 mm**
h	rail height	**47.85 mm**

SPECIFICATIONS

Manufacturer	**BOSCH REXROTH**
Manufacturer designation	**R18535312X**
Rolling elements	**cylindrical roller carriage**
Basic dynamic load rating C	**174 kN**
Basic static load rating C0	**374.9 kN**
Mass	**7.15 kg**
carriage mounting thread ($G_2 \times T_5$)	**M14**
matching rail	**SNS 55 (R1805)**
static moments M_{0x} / M_{0Y} / M_{0Z}	**5,100 / 4,420 Nm**