CASTOMER

DATASHEET

Linear carriage R18536322X BOSCH REXROTH

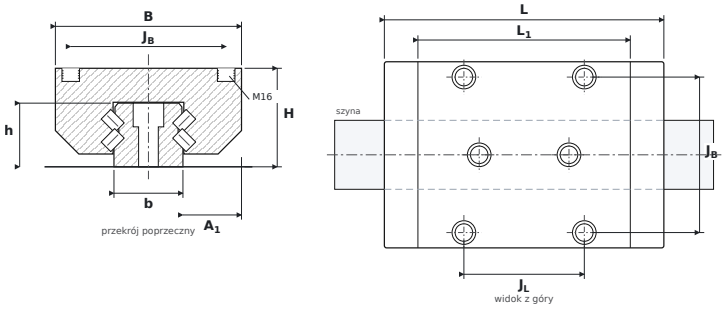

DIMENSIONS

B	carriage width	**170 mm**
H	overall height (carriage on rail)	**90 mm**
L	overall carriage length	**255.3 mm**
L1	body length (without end seals)	**194 mm**
JB	mounting hole spacing — across	**142 mm**
JL	corner hole spacing — along	**110 mm**
A1	rail flank to carriage side	**53.5 mm**
b	rail width	**63 mm**
h	rail height	**58.15 mm**

SPECIFICATIONS

Manufacturer	**BOSCH REXROTH**
Manufacturer designation	**R18536322X**
Rolling elements	**cylindrical roller carriage**
Basic dynamic load rating C	**295.9 kN**
Basic static load rating C0	**606.3 kN**
Mass	**14.18 kg**
carriage mounting thread ($G_2 \times T_5$)	**M16**
matching rail	**SNS 65 (R1805)**
static moments M_{0x} / M_{0Y} / M_{0Z}	**10,510 / 8,870 Nm**