Track roller 305705-2RSR NKE

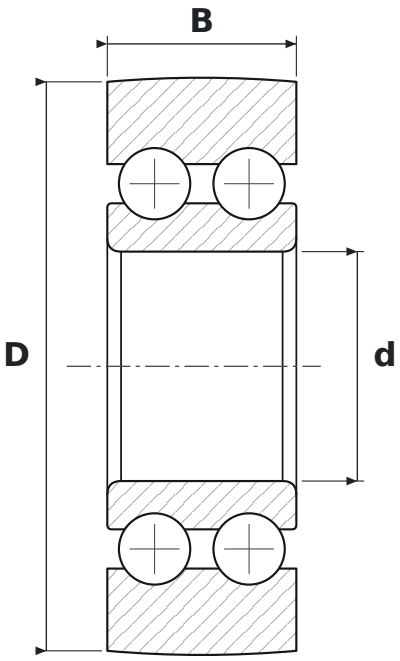

DIMENSIONS

d	bore diameter	**25 mm**
D	outside diameter	**62 mm**
B	width	**20.6 mm**

SPECIFICATIONS

Manufacturer	**NKE**
Manufacturer designation	**305705-2RSR**
Rolling elements	**double-row ball bearing**
2RS	**contact rubber seals, both sides**