Track roller 305707-2Z NKE

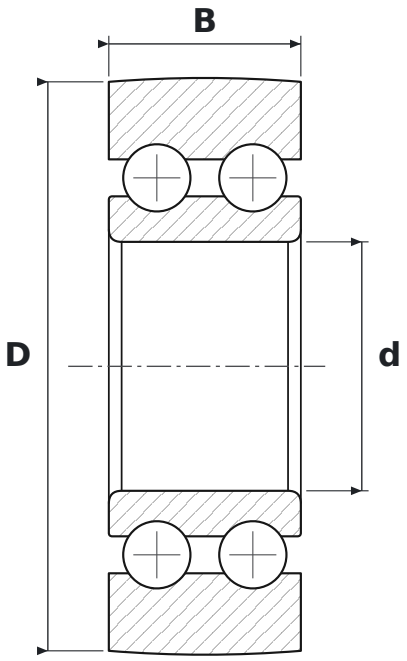

DIMENSIONS

d	bore diameter	**35 mm**
D	outside diameter	**80 mm**
B	width	**27 mm**

SPECIFICATIONS

Manufacturer	**NKE**
Manufacturer designation	**305707-2Z**
Rolling elements	**double-row ball bearing**
2Z	**steel shields, both sides**
Mass	**0.66 kg**