Track roller 305805 C-2Z SKF

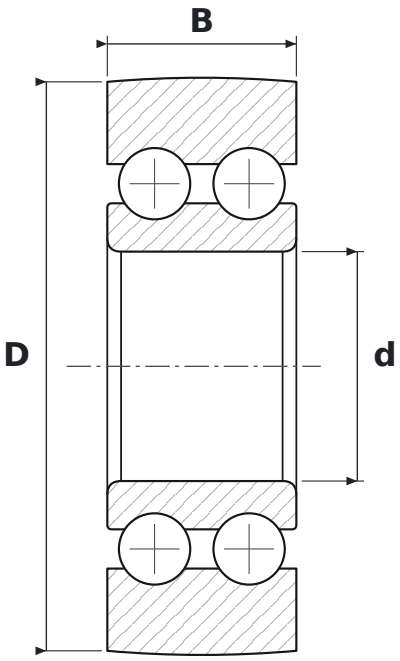

DIMENSIONS

d	bore diameter	**25 mm**
D	outside diameter	**62 mm**
B	width	**20.6 mm**

SPECIFICATIONS

Manufacturer	**SKF**
Manufacturer designation	**305805 C-2Z**
Rolling elements	**double-row ball bearing**
2Z	**steel shields, both sides**