Track roller FG1030 SW NADELLA

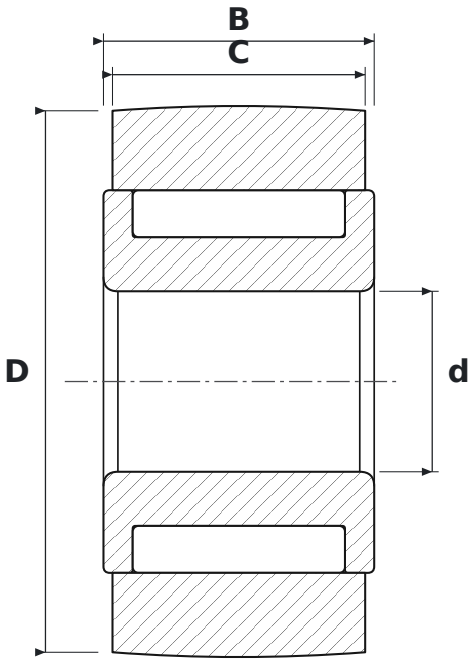

DIMENSIONS

d	bore diameter	**10 mm**
D	outside diameter	**30 mm**
C	roller running width	**14 mm**
B	width	**15 mm**

SPECIFICATIONS

Manufacturer	**NADELLA**
Manufacturer designation	**FG1030 SW**
C – outer ring width	**14 mm**
Rolling elements	**needle roller bearing, full complement**
Seal	**open – no seals**