Track roller FG3062 EEMSW NADELLA

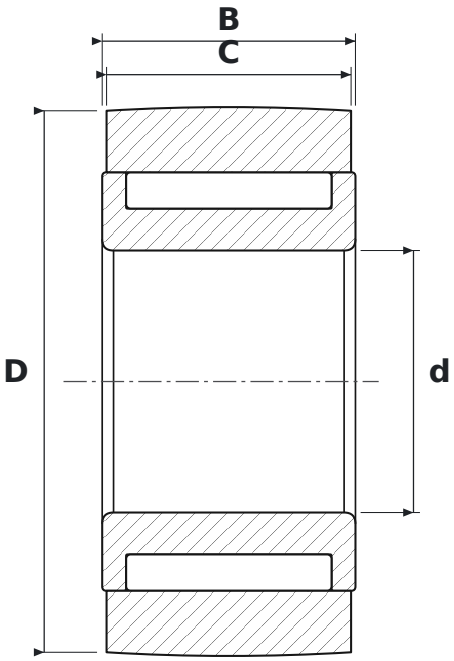

DIMENSIONS

d	bore diameter	**30 mm**
D	outside diameter	**62 mm**
C	roller running width	**28 mm**
B	width	**29 mm**

SPECIFICATIONS

Manufacturer	**NADELLA**
Manufacturer designation	**FG3062 EEMSW**
C – outer ring width	**28 mm**
Rolling elements	**needle roller bearing, full complement**
E	**reinforced design, higher load rating**
EM	**machined brass cage (NSK)**
Seal	**open – no seals**