Track roller FG5090 EEMSW NADELLA

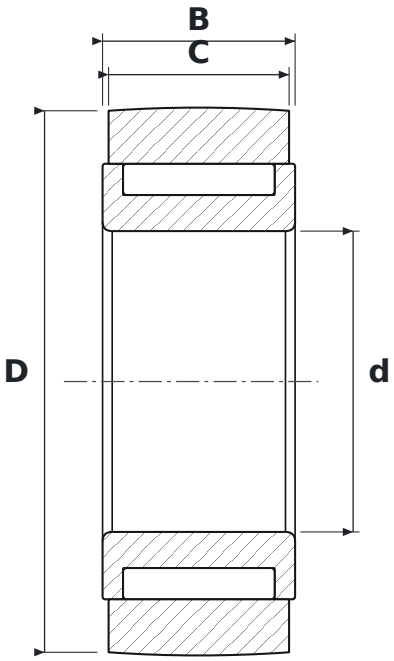

DIMENSIONS

d	bore diameter	**50 mm**
D	outside diameter	**90 mm**
C	roller running width	**30 mm**
B	width	**32 mm**

SPECIFICATIONS

Manufacturer	**NADELLA**
Manufacturer designation	**FG5090 EEMSW**
C – outer ring width	**30 mm**
Rolling elements	**needle roller bearing, full complement**
E	**reinforced design, higher load rating**
EM	**machined brass cage (NSK)**
Seal	**open – no seals**