Track roller FG60110 SW INNE

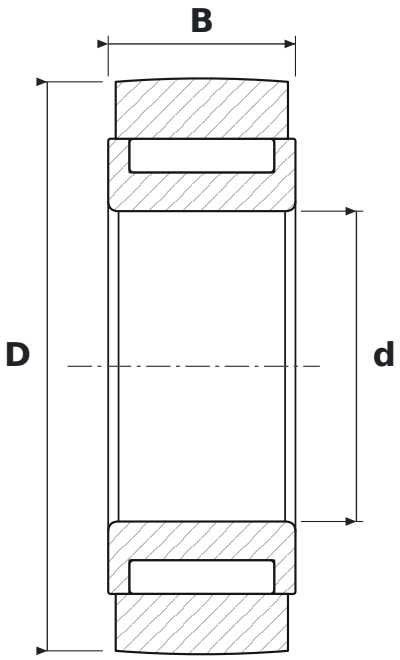

DIMENSIONS

d	bore diameter	**60 mm**
D	outside diameter	**110 mm**
B	width	**36.2 mm**

SPECIFICATIONS

Manufacturer	**INNE**
Manufacturer designation	**FG60110 SW**
Rolling elements	**needle roller bearing, full complement**
Seal	**open – no seals**
Mass	**1.65 kg**