Track roller FG65120 SW NADELLA

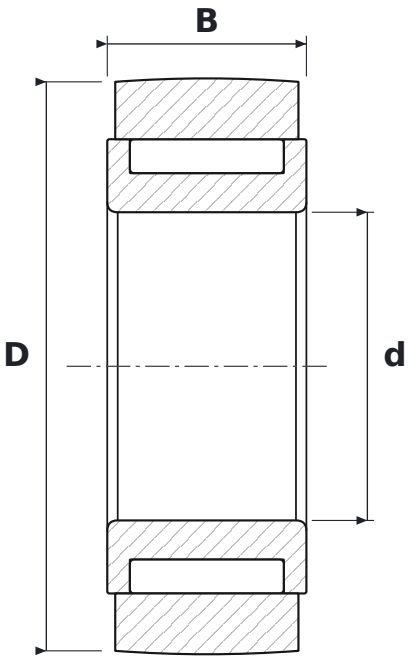

DIMENSIONS

d	bore diameter	**65 mm**
D	outside diameter	**120 mm**
B	width	**42 mm**

SPECIFICATIONS

Manufacturer	**NADELLA**
Manufacturer designation	**FG65120 SW**
Rolling elements	**needle roller bearing, full complement**
Seal	**open – no seals**