Track roller FG80140 SW NADELLA

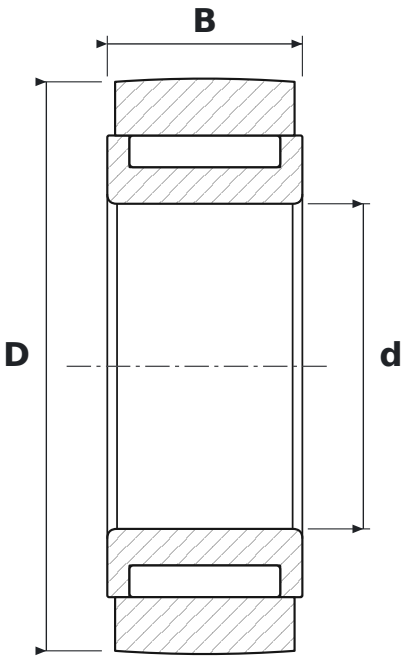

DIMENSIONS

d	bore diameter	**80 mm**
D	outside diameter	**140 mm**
B	width	**48 mm**

SPECIFICATIONS

Manufacturer	**NADELLA**
Manufacturer designation	**FG80140 SW**
Rolling elements	**needle roller bearing, full complement**
Seal	**open – no seals**